Eco Style
DC 52"

A contemporary three blade design which complements modern decor, both inside and outside the home.

White
No Light
F4010/101B

White/Beechwood
No Light
F4010/121B

Black
No Light
F4010/202B

Black/Koa
No Light
F4010/205B

White
CCT LED
F4011/101B

White/Beechwood
CCT LED
F4011/121B

Black
CCT LED
F4011/202B

Black/Koa
CCT LED
F4011/205B

8 Year
8 Year Motor Warranty
2 year in home + 6 year motor replacement

Technical Data

* All outdoor fans must be an enclosed outdoor area min 1.5m from edge of eave/roof, fully shielded from wind, rain & direct sunlight.

Install Location:	Indoor / Outdoor*
Motor Type:	DC
Blade Material:	ABS Plastic
Reversible:	Yes
Mount Angle:	0-15˚
Blade Pitch:	12˚ (Approx)
Timer:	1, 4, 8 Hour

Remote:

Supplied with remote control

Remote frequency 433 MHz

Performance

Speed	Wattage	RPM	Airflow
1	1.3	62	3,249
2	2.6	87	5,246
3	4.8	111	5,781
4	8.1	137	6,884
5	18	178	8,807
6	30	200	9,448

About the CCT LED Light

3000k	4000k	6000k
2102 Lumens	1959 Lumens	1956 Lumens

Light Type:	LED (20w)
Dimmable:	Yes (Stepless)

FCSP13-FM009 User Replaceable LED Light Panel. Plug in LED panel can be replaced without an electrician.

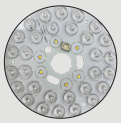

CCT & Dimming level memory, turn your fan off / on and the same light settings will be retained

Dimensions

No Light

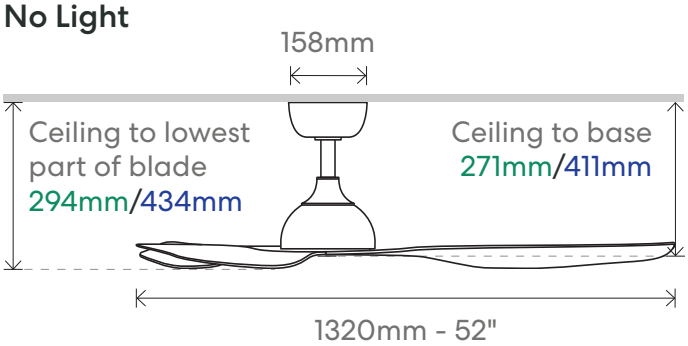

Supplied with 2 extension rods
114mm/254mm

CCT LED Light

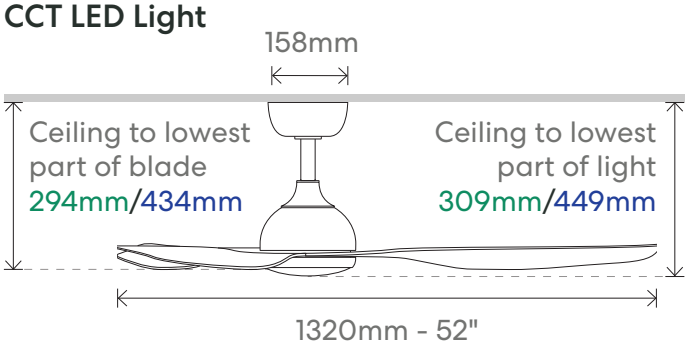

Extension Rods

White	
K701M/106A	600mm
K701M/109A	900mm
K701M/115A	1500mm

Black	
K701M/206A	600mm
K701M/209A	900mm
K701M/215A	1500mm

Eco Style
DC 60"

A contemporary large diameter three blade design well suited to larger living spaces.

White
No Light
F4020/101B

White/Beechwood
No Light
F4020/121B

Black
No Light
F4020/202B

Black / Koa
No Light
F4020/205B

Technical Data

* All outdoor fans must be an enclosed outdoor area min 1.5m from edge of eave/roof, fully shielded from wind, rain & direct sunlight.

Install Location:	Indoor / Outdoor*
Motor Type:	DC
Blade Material:	ABS Plastic
Reversible:	Yes
Mount Angle:	0-15˚
Blade Pitch:	12˚ (Approx)
Timer:	1, 4, 8 Hour

Remote:
Supplied with remote control

Remote frequency 433 MHz

Performance

Speed	Wattage	RPM	Airflow
1	2.2	67	4,915
2	5.7	102	5,738
3	9.5	121	6,629
4	16.7	146	9,728
5	25.0	166	12,160
6	34.7	183	15,200

Dimensions

Supplied with 2 extension rods
101mm/254mm

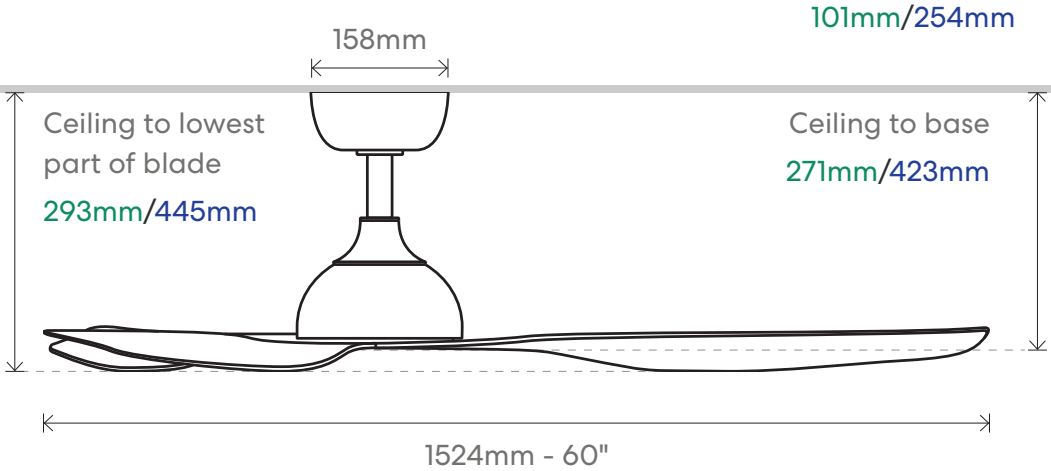

Extension Rods

White		Black	
K701M/106A	600mm	K701M/206A	600mm
K701M/109A	900mm	K701M/209A	900mm
K701M/115A	1500mm	K701M/215A	1500mm